MODEL:

MI-165-50-6.5-FG-KC-00/00

Ver：01

DRIVER SPECIFICATIONS

Parameter

F_o	48Hz ± 20%
SPLo (1m/1w)	88dB±2dB
Qts	0,48
Vas	18 Litr
Rated Impedance	6.5Ω ± 15%
Rated power	50 Watts
Long Term Power	100 Watts
Fr. Response	48Hz~10KHz
Shielding	NO

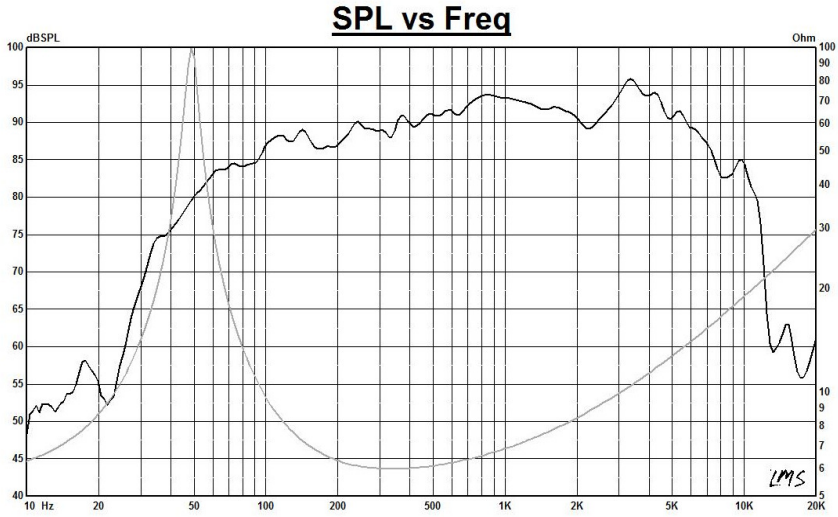

Structure of Driver

Diaphragm	Honeycomb fiberglass Alum. phase plug
Frame/panel	Aluminum
Magnet Diameter	ϕ 110mm
Magnet Weight	654g/23.1oz.
voice Coil	KSV ϕ 30.5mm
Weight	1.95 Kg

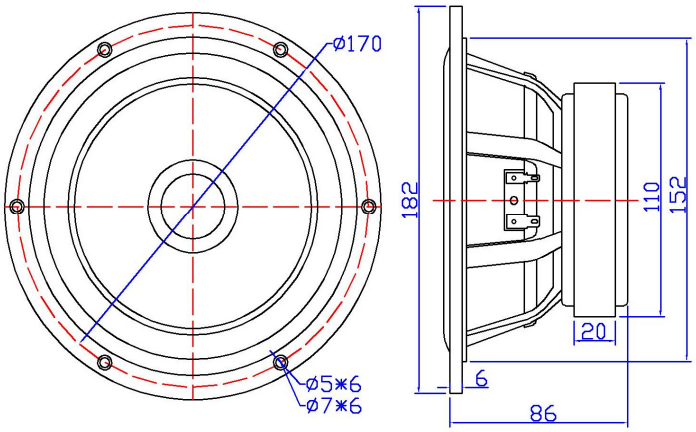

Picture